US00D870837S

(12) **United States Design Patent** (10) **Patent No.: US D870,837 S**
Cudazzo (45) **Date of Patent: ** Dec. 24, 2019**

(54) **WEAPON**

(71) Applicant: **Far League S.r.l.**, Milan (IT)

(72) Inventor: **Antonio Cudazzo**, Milan (IT)

(73) Assignee: **Far League S.R.L.**, Milan (IT)

(**) Term: **15 Years**

(21) Appl. No.: **29/595,666**

(22) Filed: **Mar. 1, 2017**

(51) **LOC (12) Cl.** **22-01**

(52) **U.S. Cl.**
USPC **D22/104**; D22/103

(58) **Field of Classification Search**
USPC D22/100, 101, 102, 103, 104, 105, 106, D22/107, 108, 109, 110, 111, 199; D21/571, 573, 574, 575, 746
CPC F41C 23/14; F41C 23/20; F41C 23/04; F41C 23/00; F41C 23/10; F41C 27/00; F41C 7/00; F41C 23/06; F41C 3/00; F41B 5/10; F41B 5/14; F41B 5/0094; F41B 5/1469; F41B 5/00
See application file for complete search history.

(56) **References Cited**

U.S. PATENT DOCUMENTS

D206,669	S *	1/1967	Hirsch	D21/573	
3,711,980	A *	1/1973	Palama'	F41A 3/66	42/16
4,735,007	A *	4/1988	Gal	F41C 23/04	42/7
4,833,970	A *	5/1989	Wilhelm	F41A 19/33	89/141
D641,062	S *	7/2011	Faifer	D22/103	
D650,034	S *	12/2011	Lindsay	D22/103	
D650,035	S *	12/2011	Lindsay	D22/103	
D696,374	S *	12/2013	Faifer	D22/104	
D699,807	S *	2/2014	Lee	D22/108	
D717,901	S *	11/2014	Kerbrat	D22/103	
2009/0277066	A1 *	11/2009	Burt	F41A 3/66	42/6
2009/0282718	A1 *	11/2009	Bartley	F41C 23/12	42/75.03
2011/0030258	A1 *	2/2011	Fistikchi	F41C 23/12	42/1.06
2018/0023912	A1 *	1/2018	Cudazzo	F41A 3/54	89/136

OTHER PUBLICATIONS

"List of submachine guns" [online]. wikipedia.org. [Retrieved Mar. 7, 2019]. Retrieved from the Internet: <https://en.wikipedia.org/wiki/List_of_submachine_guns>.*

(Continued)

Primary Examiner — Khawaja Anwar
Assistant Examiner — Mojtaba Tehrani
(74) *Attorney, Agent, or Firm* — Blank Rome LLP

(57) **CLAIM**

The ornamental design for a weapon, as shown and described.

DESCRIPTION

FIG. **1** is a perspective view of a weapon, with stock in fully collapsed position and the foregrip folded, showing my new design;
FIG. **2** is a perspective view thereof, with stock in fully extended position and the foregrip opened;
FIG. **3** is a left side view of a weapon shown in the FIG. **1** configuration;
FIG. **4** is a right side view thereof;
FIG. **5** is a rear view thereof;
FIG. **6** is a front view thereof;
FIG. **7** is a bottom view thereof; and,
FIG. **8** is a top view thereof.
The broken lines in the drawings illustrate portions of the weapon that form no part of the claimed design.

1 Claim, 8 Drawing Sheets

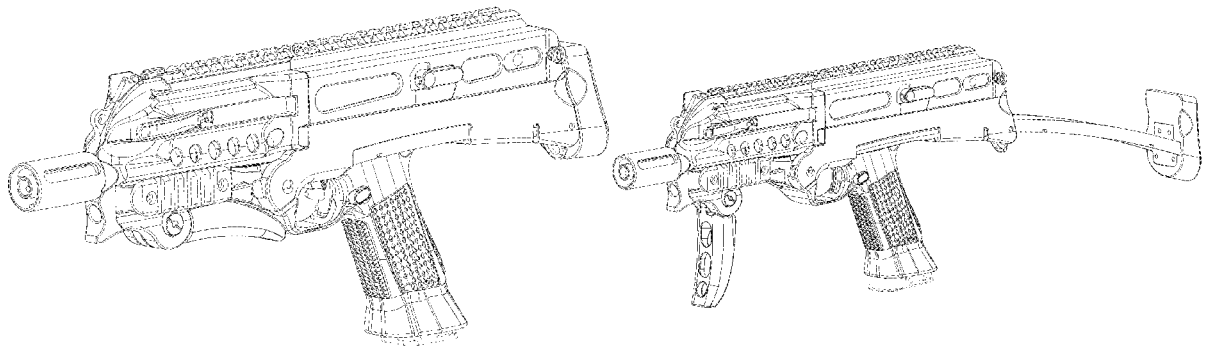

(56) **References Cited**

OTHER PUBLICATIONS

"Heckler & Koch MP7: Not your father's sub-machine gun" [online]. Chris Cheng. [Published Oct. 19, 2012]. Retrieved from the Internet: <https://www.thefirearmblog.com/blog/2012/10/19/heckler-koch-mp7-not-your-fathers-sub-machine-gun/>.*

"You Can Shoulder the Micro Roni Stabilizer". [online]. Matthew Moss. [Published Feb. 8, 2018]. Retrieved from the Internet: <https://www.thefirearmblog.com/blog/2018/02/08/can-shoulder-micro-roni-stabilized>.*

* cited by examiner

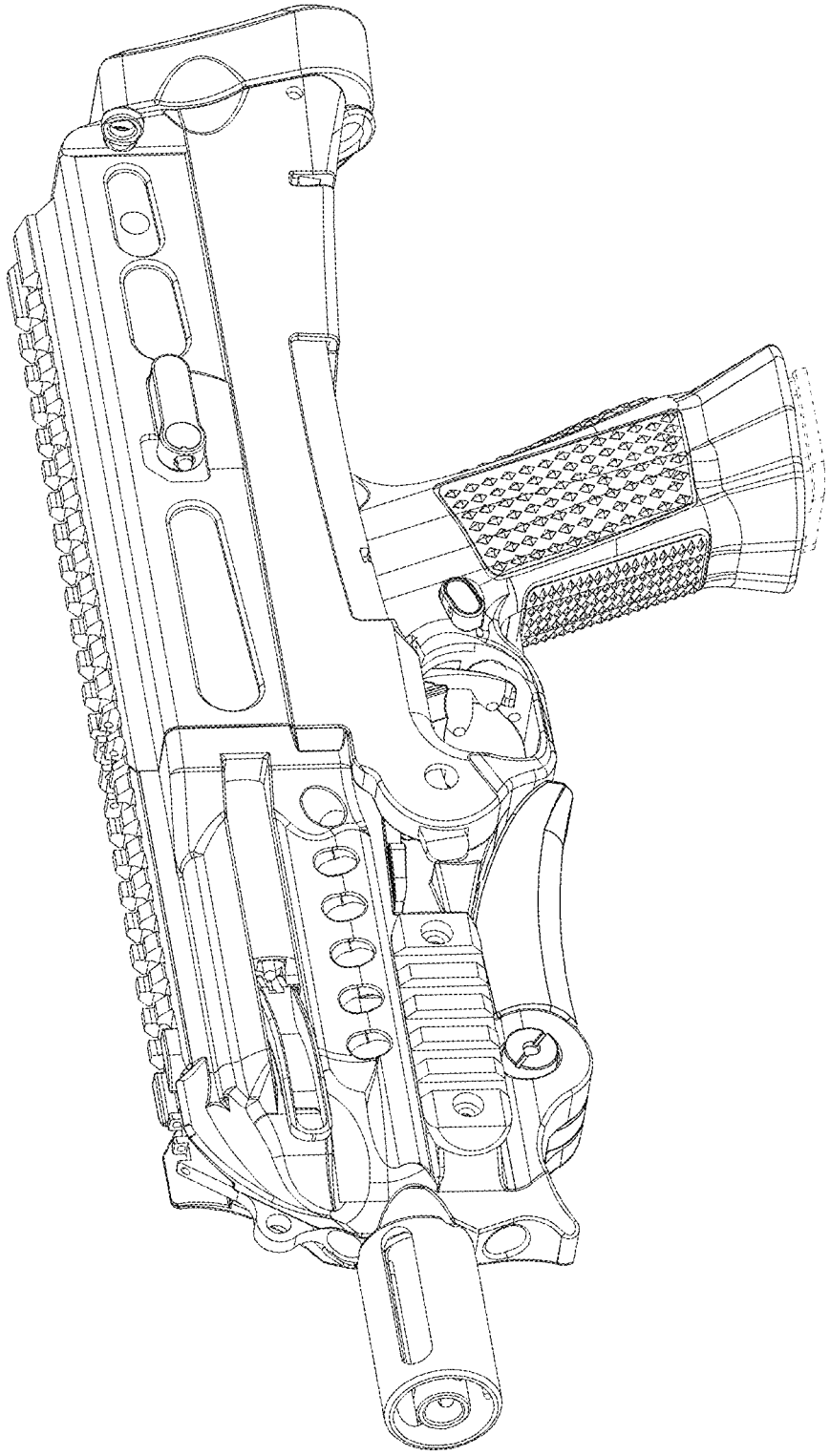

FIG. 1

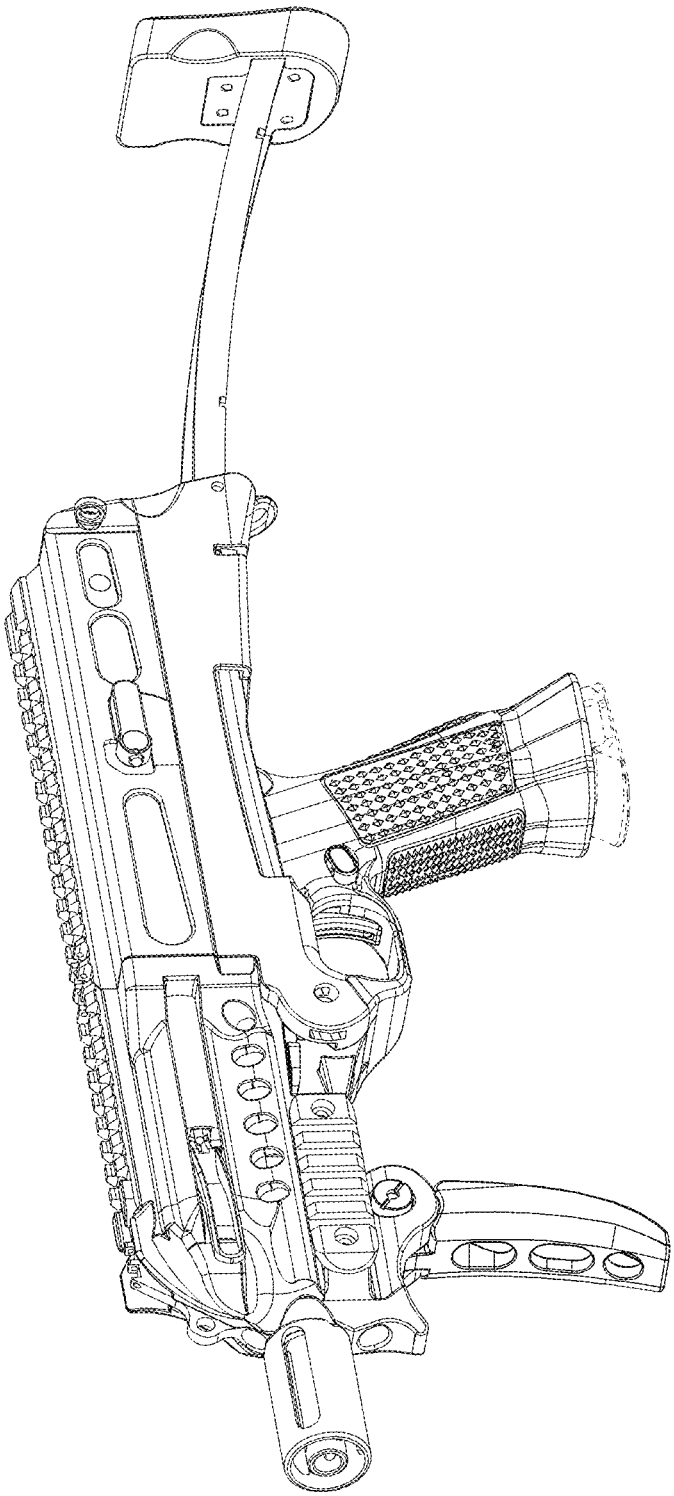

FIG. 2

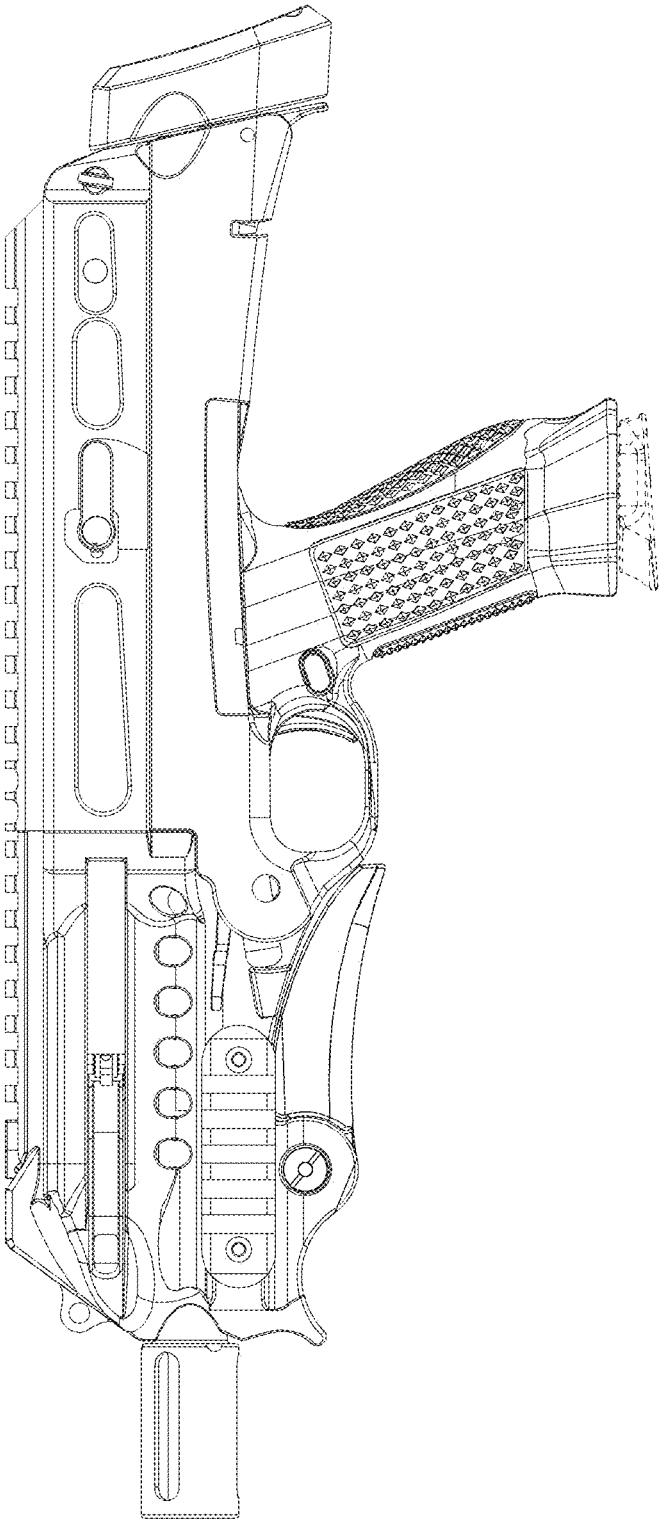

FIG. 3

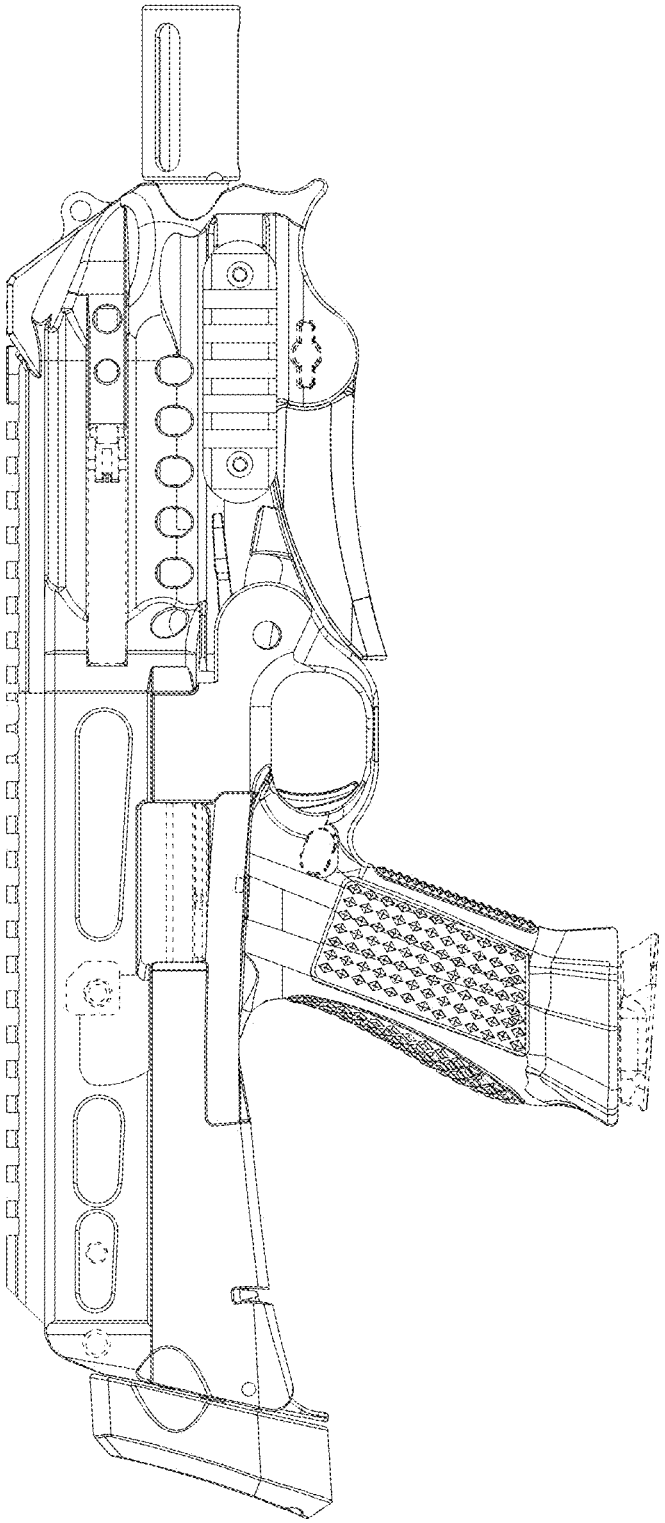

FIG. 4

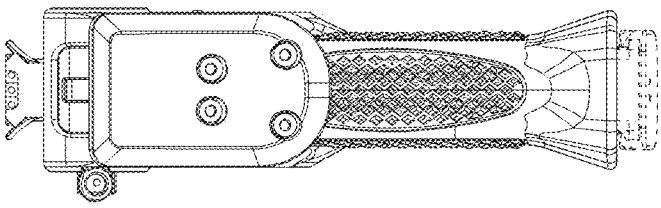

FIG. 5

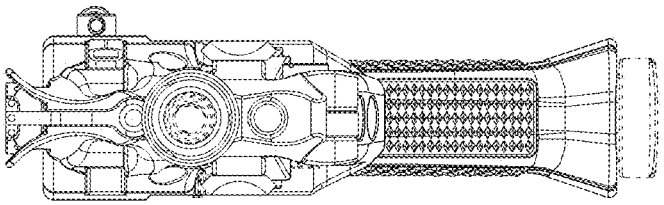

FIG. 6

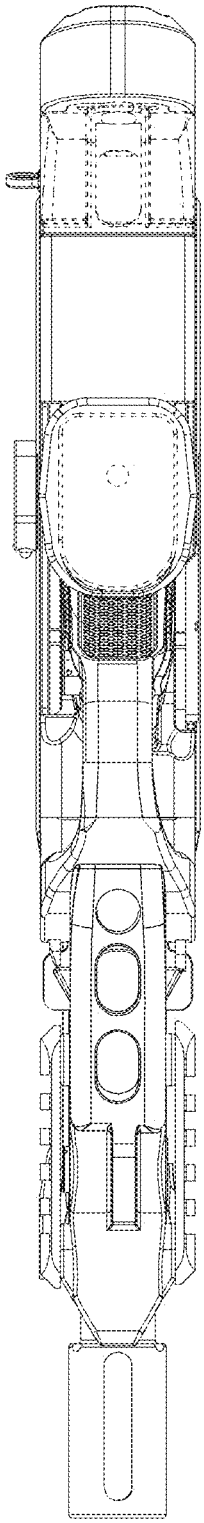

FIG. 7

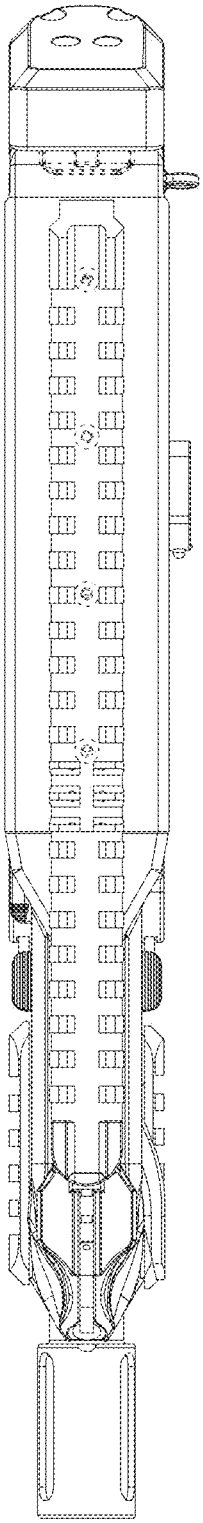

FIG. 8